Varde Fuego

Installation— and User guide

Revision 02

VARDE OVNE

Congratulation on the purchasing your new stove

Varde Ovne A/S is a Danish company specialising in functional, environmentally friendly quality stoves in attractive designs.

Index

Welcome and contents	Page 2
Technical specifications Fuego 1	Page 3
Technical specifications Fuego 2	Page 4
Technical specifications Fuego 1 Soapstone	Page 5
Regulations and certifications	Page 8
Flooring and distances	Page 9
Chimney	Page 10
Air supply	Page 11
Operation	Page 12
List of accessories	Page 13
Vermiculite	Page 14
How to choose the wood	Page 15
How to light and stoke a fire	Page 16
Maintenance	Page 17
Troubleshooting	Page 18
Spare parts	Page 19
Fresh air supply	Page 20
Installation of the AirBox (extra)	Page 21
Test certificate from RWE	Page 22
Test certificate from the Danish Technological Institute	Page 23
Warranty	Page 24

Technical Specification

Varde Fuego 1

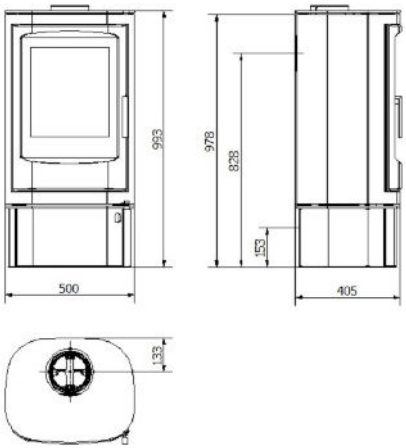

Model Fuego 1

Hight (mm)	993
Wide (mm)	500
Depth (mm)	405
Weight (kg)	125
Effect	3-7 w
Nominal Output	5 Kw
Heated area	30-105 m^2
Efficiency	75%

Flue gas data: 5.5 g/sec, 340°C ved 20°C, 11 pa.

Combustion chamber:
(H x W x D): 260/380 x 200/300 x 260mm
Flue outlet Ø 15 cm (Mounting hight top: ~98cm)

Distance to non-flammable:
5-10cm (recommended)

Distance to flammable materials:
Rear = 20cm, Sides = 20cm, In front = 80cm

VARDE OVNE

Technical Specifications

Varde Fuego 2

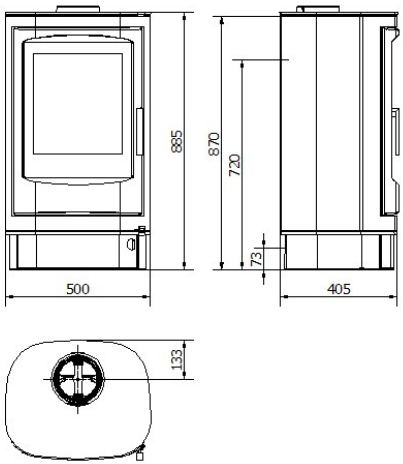

Model Fuego 2

Hight (mm)	885
Wide (mm)	500
Depth (mm)	405
Weight (kg)	122
Effect	3-7 w
Nominel Output	5 Kw
Heated area	30-105 m^2
Efficiency	75%

Flue gas data: 5.5 g/sec, 340°C ved 20°C, 11 pa.

Combustion chamber:
(H x W x D): 260/380 x 200/300 x 260mm
Flue outlet Ø 15 cm (Mounting hight top: ~87cm)

Distance to non-flammable:
5-10cm (recommended)

Distance to flammable materials:
Rear = 20cm, Sides = 20cm, In front = 80cm

VARDE OVNE

Tekniske specifications

Varde Fuego 1 Soapstone

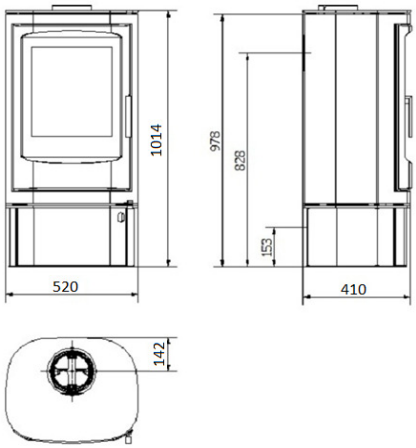

Model Fuego 1 Soapstone

Hight (mm)	1014
Wide (mm)	520
Depth (mm)	410
Weight (kg)	140
Effect	3-7 w
Nominel Output	5 Kw
Heated area	30-105m2
Efficiency	75%

Flue gas data: 5.5 g/sec, 340°C ved 20°C, 11 pa.

Combustion chamber:
(H x W x D): 260/380 x 200/300 x 260mm
Flue outlet Ø 15 cm (Mounting hight top: ~98cm)

Distance to non-flammable:
5-10cm (recommended)

Distance to flammable materials:
Rear = 20cm, Sides = 20cm, In front = 80cm

VARDE OVNE

Important!
Before installing and lighting your new **Varde Ovne stove** for the first time, we recommend that you first take a couple of minutes to read this installation and user guide.

Inspection of installation
It is very important that the installation is inspected by a qualified chimney sweeper before the stove is used for the first time.

This **Varde Ovne stove** has been certified in accordance with European Standard EN 13240, German Stufe II and Norwegian Standards (NS), and has therefore been proved to be an environmentally friendly product.

Regulations
All local regulations, including regulations referring to national and European standards, should be adhered to when installing your stove.

Note: All Varde Ovne stoves are closed fireplaces.

The stoves are designed for intermittent combustion and can be connected to a chimney used by other fireplaces.

Professional installation
We recommend that you consult with the dealer who sold you the stove or another competent installer, as there may be specific things to consider during the installation. You should also receive the applicable rules for installing the stove and follow them.

Note:

Compulsory registration
You are required by law to register your stove with your local chimney sweeper.

Store the stove in a dry place at room temperature until installation. Moisture will damage the stove. Be aware that an existing chimney is not necessarily effective enough for a new modern stove.

EC declaration of confirmaty.

MANUFACTURER	
Name:	**Varde Ovne A/S**
Adress	Kongevej 246, DK-6510 Gram, Danmark
Pejse Inspektion	
Name:	**RWE Power AG**
Adress:	Dürner strasse 92, 50226 Frechen, Germany
	Notified body Number: 1427
Product	Varde Fuego 1 and 2
Product type	Fuego
Type code	Wood-burning stove, suitable for intermittent combustion
Standard	Construction products (89/106/EEC/), standard used: EN 13240
Application	Residential Heating
Fuel	Wood
Special conditions	None
CE-Markning	
Issued	2012
Nominal Output	5 kW
Fuel type	Wood
Fluegas temperature	340 °C
Efficiency	75 %
Co-release	0,08 %

01.09.2012

Jan Meldgaard
CEO

Flooring
If the floor on which the stove is to be placed is flammable, the floor must be covered with a non -flammable material, such as a steel or glass plate, floor tiles or artificial slate, covering an area of at least 15 cm on each side of the stove and at least 30 cm at the front. For the front, however, we recommend 50 cm. In addition, the floor construction must be capable of carrying the combined weight of stove and chimney.

Weight	Steel	With Soapstone
Varde Fuego 1	125 kg	145 kg
Varde Fuego 2	122 kg	-

Installation distances
If the walls are made of a non-flammable material, the stove can be placed right up against the wall. We nevertheless recommend a minimum distance of 5 – 10 cm to allow for cleaning behind the stove. The cleanout door must be accessible.

Optimal combustion requires a constant supply of fresh air, which is something you have to keep in mind. The best way to provide a steady flow of fresh air is by installing one or two air vents in the room where the stove is situated (one on each side of the room).

Installation of wood stoves – distance to flammable material
Stoves must always be placed with the following minimum distance between the outer edge of horizontal/vertical flue pipes and any flammable material: 225 mm.

Varde Fuego

A	200 mm	C	200 mm
B	225 mm	D	800 mm

According to current rules and regulations, the stove must comply with the following minimum distances from flammable walls and materials:

Sides : 20 cm

Rear : 20 cm

Distance to furniture : 80 cm

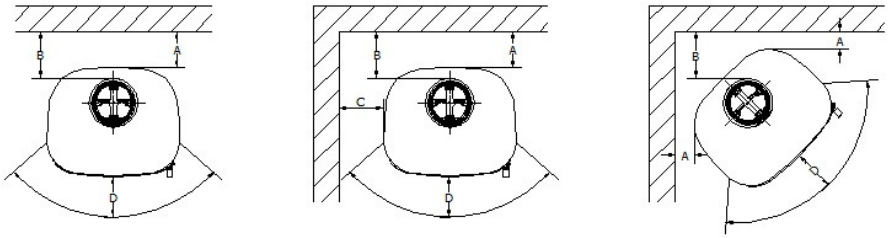

The chimney
Always use a chimney with a diameter of at least 15 cm. This corresponds to a bore of 175 cm^2. Make sure the chimney is of sufficient height, that it **draws** well and that the smoke does not bother your neighbours.

We recommend that you fit your chimney with a damper, allowing for draft control. This may prove particularly important on windy days. Note: the damper must never shut off draught completely – always allow at least 20 cm^2 free passage through the chimney.

With nominal usage the stove has tested a flue gas flow of 5.5 g/second, with a flue gas temperature of 340°C and at a room temperature of 20°C.

Varde Ovne stoves are always fitted with a smoke deflector plate which redirects smoke to make its way to the chimney as effective as possible. This ensures that the heat from the smoke is emitted inside your home rather than outside it. The smoke deflector plate is moveable and placed in the combustion chamber. You should make sure that it is pushed all the way back against the back wall of the combustion chamber.

Draught conditions
Consult your local chimney sweeper about how best to adjust the draught in your chimney.

Height of chimney
If in doubt, contact your local chimney sweeper. He will be able to inform you of the correct height.
Connection of Flue pipe

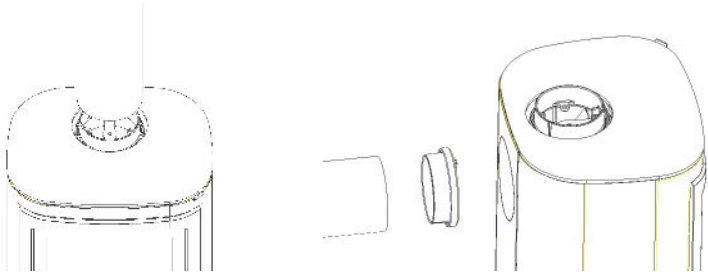

Information about the new cast iron adapter, part no. 134
Your stove is equipped with the new cast iron adapter from Varde Ovne. The adapter is suitable for standard flue pipes with an inner diameter of 150 mm.

It is now possible for you to make a condensate drain hole in the adapter if your stove is directly connected to a steel chimney:

Carefully punch a chisel or the like through the bottom of the outer groove (at the arrow mark). This way you can establish a condensate drain hole in the adapter if

Arrow mark for drain hole.

Carefully punch a hole with a chisel or the like.

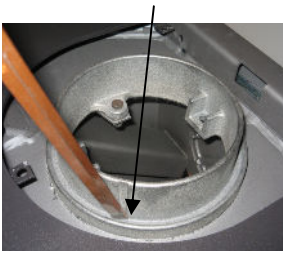

Now the condensate drain hole is ready.

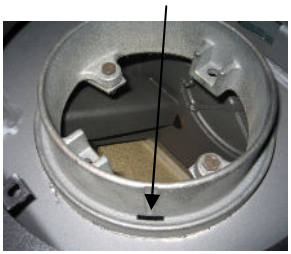

Fresh air supply
A continual supply of fresh air is required in the room in which the stove is situated. This can be achieved by installing ventilation grids in the walls and making sure they cannot be blocked. The quantity of air used for combustion is approx. 14 m³/h.

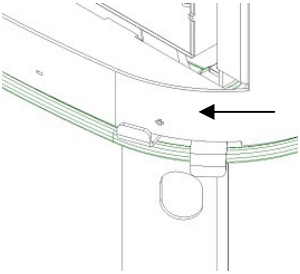

Ignition air

When the upper low handel is pushed towards left you open the ignition air. This option is only used for lightning up. As soon as the fire has a good grip— rembermber to close again.

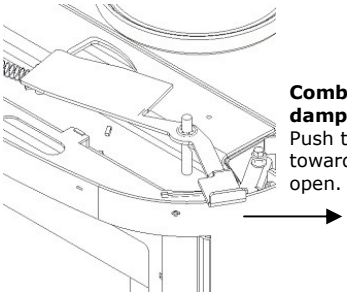

Combustion air damper
Push the damper towards the right to open.

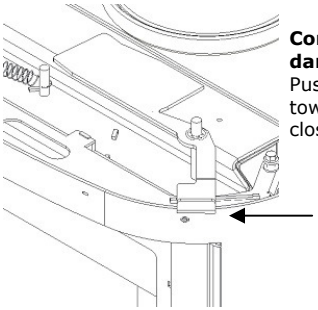

Combustion air damper
Push the damper towards the left to close.

Combustion /secondary air
Pre-heated air for the combustion process (secondary air). The amount of air can be adjusted according to needs. A high level of chimney draught requires a lesser intake of combustion air.

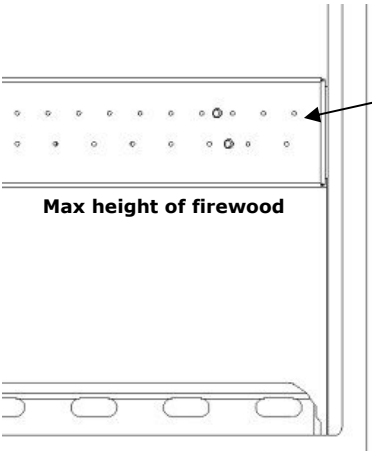

Tertiary air
Constantly added air, which makes the stove burn even cleaner while lowering the content of tar and soot in the combustion process to an absolute minimum. At optimum combustion settings, glass and combustion chamber will be burnt completely clean, and the amount of ash remaining will be minimal.

Overheating
Occurs if too much wood is placed in the stove or if too much air is added to the combustion process.

How it works

Combustion Air Throttel
The Handle is situated on the right side, on top of the stove. Push the Throttel towards right for Air Access.

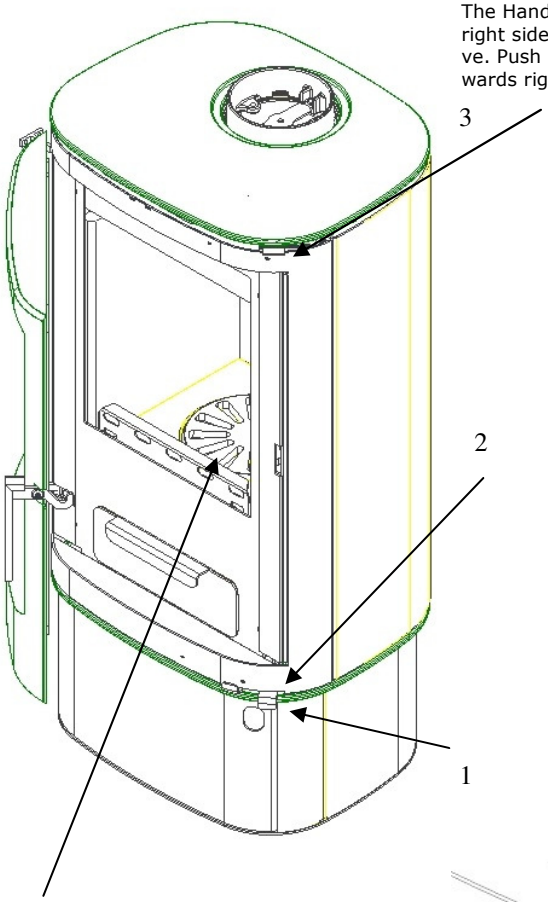

Ignition air
Lighting your Varde Ovne stove
Push all air supply levers (**1**, **2** and **3**) to the right as far as they go. Your stove is now in ignition position. Once the fire has caught properly, push lever **1** to the left as far as it goes. Wait until the fire burns evenly, and then push lever **2** to the left as far as it goes. Your stove is now in operating position. In the operating position you adjust the fire/ heating by shifting the position of lever **3**; to the right to let in more air and to the left to shut off the air.

The shaking grate

The shake grate is situated at the bottom of the combustion chamber. By pushing the lower lever (1) to left and right, the ashes will be pushed into the ash pan.

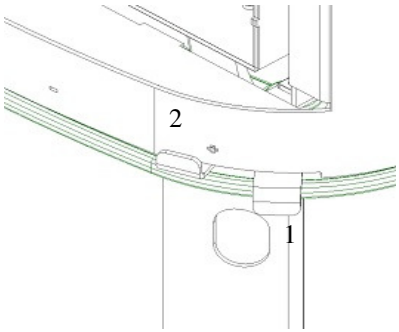

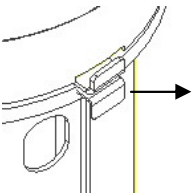

Shake grate lever (1)
The shake grate is operated with the lower lever.

Operation

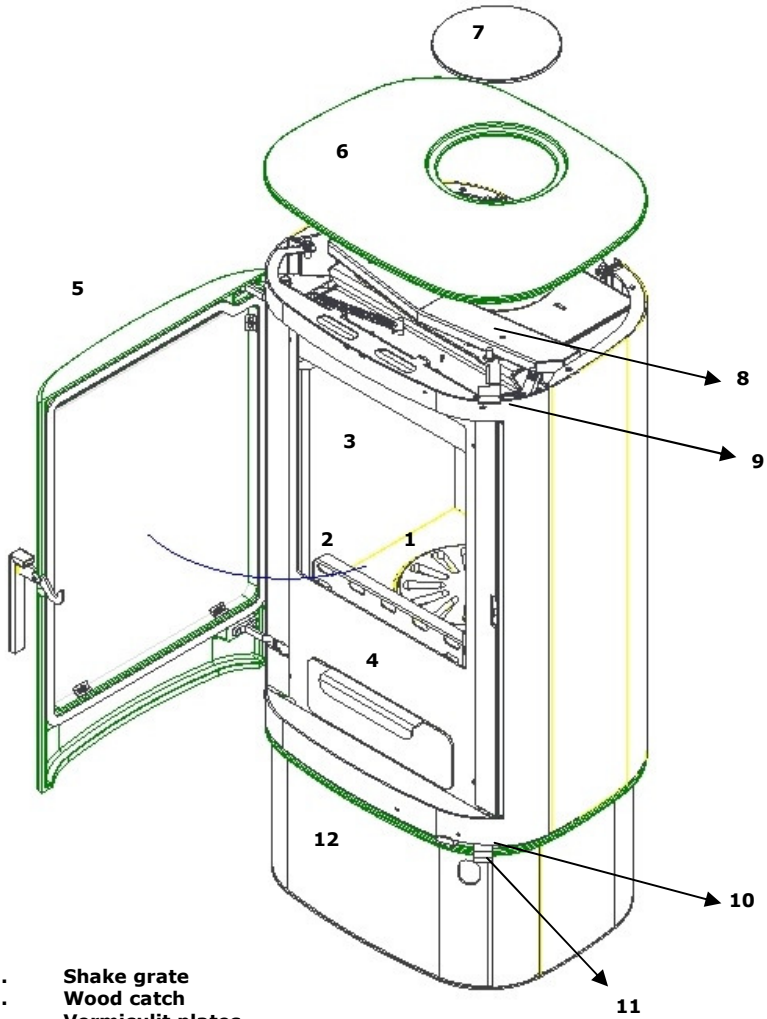

1. Shake grate
2. Wood catch
3. Vermiculit plates
4. Ash pan
5. Cast iron Door
6. Cast iron Top
7. Cast iron cover
8. Airbox kit(Extra)
9. Combustion air lever
10. Ignition air Lever
11. Shakegrate lever
12. Stove base

Vermiculite
The plates in the combustion chamber are called **vermiculite plates** and will eventually become worn, as will the smoke guide plate. Accidental breakage of a plate, for instance by hitting it hard with a piece of wood, will not affect the quality of the combustion. You do not need to replace the plate until the gap is approx. 5 mm wide.

Vermiculite
A special, non-flammable material that looks like chipboard. The plates act as insulation and at the same time protect the stove against wear and tear. The vermiculite plates and the deflector plate are not covered by the warranty.

Vermiculite is a **very porous** material and should be handled with care. When refilling the stove, stoke the wood carefully and use a glove.

Only use original parts from Varde Ovne A/S

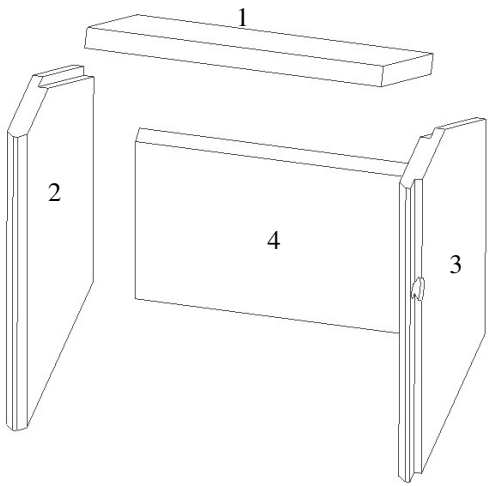

Vermiculit set,
Item no.: 2223506

1. Smoke guide plate
2. Left side plate
3. Right side plate
4. Rear plate

How too replace the Vermiculite

1. Lift the smoke deflector plate slightly, tilt the rear end forward and remove.
2. Lift the left side plate slightly and rotate outwards.
3. Lift the right side plate and rotate outwards.
4. Lift the rear plate up and out of the stove.

When fitting the new vermiculite plates, begin with the rear plate and repeat the steps in the reverse order, finishing with step 1

What kind of wood is best?
Generally, beech wood is considered the best type of wood for burning. It burns evenly without producing much smoke, and ashes are clean and take up little space. Ash, birch and maple are good alternatives.

How big should the logs be?
Split firewood with a diameter larger than 10 cm. Use firewood measuring 20 – 25 cm in length. The use of larger quantities of fuel than recommended in the table below will overload the stove and result in increased temperatures in the chimney and reduced efficiency. This may cause damage to both chimney and stove and will invalidate the warranty.

Kindling
Length: 20 – 25 cm
Width 3 x 3 cm
Normal amount: 10 – 15 sticks (approx. 1 kg)

Logs
Length: 25 – 30 cm
Diameter: max. 10 cm
Normal amount: 3 – 4 logs (approx. 2 kg)

The new stove
The first time you light up the stove, the enamel will temper and give off some smoke and a slightly burnt smell. We recommend that you leave doors and windows open, as airing the room will make the smell disappear.
This tempering softens the enamel, making it susceptible to damage. Therefore exercise caution and avoid touching the enamel. We also recommend opening the door to the stove at regular intervals during the first couple of hours to prevent the rope seal from sticking to the enamel.

What to burn
This **Varde Ovne stove** has been tested and approved for the burning of wood. Use only dry wood with a moisture content of max. 21% and a size that fits into the combustion chamber. The burning of moist wood will result in an increased amount of tarry soot, pollution and poor fuel economy. Newly chopped wood contains about 60 – 70% moisture, which makes it completely unsuitable as fuel. Allow newly chopped firewood to dry in an open shed for at least one year before using it in the stove.

Do not use – consider the environment!
Also, **never** use toxic materials such as chipboard, painted or impregnated wood. Firing with this type of unsuitable material would alter the combustion properties of the stove, affect its efficiency and potentially result in overheating of the stove and invalidation of the warranty.

Top-down lighting of the fire
Do not stack the firewood beyond the height shown on page 11.

The following optimal register and fuel quanitty settings are recommended(in case of similar chimney draught):

Fuel Quantity [kg]	Primary Air open [%]	Combustion Air open [%]	Nominal Output [kW]	Chimney Draught [PA]	Efficiency [≥ i %]	Refill interval at nominal output [minuts]
1,2	0 (closed)	ca. 80 (almost open)	5,0	12	75%	ca. 45

How to light and stoke a fire
The first time you light up the stove, the enamel will temper and give off some smoke and a slightly burnt smell. We recommend that you leave doors and windows open, as airing the room will make the smell disappear.
This tempering softens the enamel, making it susceptible to damage. Therefore exercise caution and avoid touching the enamel. We also recommend opening the door to the stove at regular intervals during the first couple of hours to prevent the rope seal from sticking to the enamel.
Never use highly flammable liquids such as methylated spirit or petrol for lighting up!

We recommend using 'top-down' lighting, where you light the wood at the top of the combustion chamber and not at the bottom. This is the most environmentally friendly method to light a fire. The method will also help keep the glass clean. Place four small logs in a cross on the bottom plate of the combustion chamber (approx. 1.5 – 2 kg) with a small distance between each log. Place 8 – 12 smaller sticks (0.5 – 1 kg) in a cross on top of the logs, and 2 – 3 firelighters at the top and in between the sticks.
A thin layer of ash at the bottom of the stove makes it easier to light the fire.

Before lighting the stove, open the **shaking grate** by pulling the small lever under the combustion chamber completely towards the right. Pull the lever underneath to the right as well to allow the **ignition air** to enter and pull the **combustion air** damper towards the right until it is completely open.

Once the fire burns, remember to close the ignition air vent and shaking grate again. Otherwise, the stove and chimney might become overheated, which would invalidate the warranty.

Once the kindling has reduced to embers, we recommend opening the door slightly for a couple of seconds to neutralise the negative pressure in the combustion chamber before opening the door completely.
Place 3 – 4 logs in a cross on top of the embers (approx. 2 kg) and close the door again. To make sure the wood ignites quickly, we recommend briefly opening the ignition air vent and make sure you remember to close it again once the fire gets going. You can then adjust the combustion air according to your heating requirements.
Take care not to shut off the air supply completely, otherwise the fire will die. The fire should always burn bright and clear.

In most instances, however, you will have to identify the **best combustion air settings** yourself, as the height and draught of your chimney as well as the quality of the firewood are decisive factors in determining the best settings for your particular stove.

If the nominal heat output of your stove is too high compared to your heating requirements, you can reduce the output as follows:
- Stoke a smaller amount of wood than usual, for example 1.2 – 1.3 kg, preferably consisting of 3 – 4 smaller pieces of wood. Apply full air to ignite the wood properly before reducing the combustion air, perhaps down to approx. 60%. Be careful not to reduce the air supply to the point that the fire dies. The fire should always burn bright and clear.
With this method it is possible, depending on the chimney, wood quality, etc., to reduce the stove's heat output from a nominal 5 kW down to perhaps 3 – 3.5 kW.

Please be aware that it can lead to poor combustion if you reduce the combustion air too much, resulting in a lower efficiency and increased emission levels (increased pollution).

You may wonder why your stove is fitted with a gap in the rear vermiculite plate in the combustion chamber, with small holes through the back steel plate, but these holes are an important part of the combustion system. We refer to these air ducts as the '**tertiary air**'. They are an important part of a clean-burning stove.
When refilling the stove with wood, we recommend opening the stove door once only embers are left in the combustion chamber. Opening the door while flames are still burning and producing smoke and gas might cause smoke to escape into the room.

If you have problems lighting or operating the stove, see the section on **Troubleshooting.**

Maintenance
Like any piece of equipment in daily use, your stove needs maintenance.
The stove should only be cleaned when cold. Use a dry cloth for cleaning the exterior of the stove.
Clean the interior regularly by removing ashes, soot and tar from the combustion chamber. The smoke deflector plate should be removed for cleaning, as the reverse side will be covered in dirt and soot. Finally check that the smoke pathway through the flue pipe and chimney is completely clear. You should also inspect the rope seals in the door and ash pan for signs of wear. Replace them if they no longer seal properly. Also, remember to lubricate the door hinges as required.

Glass pane
The glass pane should be cleaned using Varde Glas Cleaner, which is available at all DIY centres selling **Varde Ovne stoves**.

Empty the **Ash pan** regularly. It can be emptied into your dustbin, as long as you make sure it does not contain any hot embers. If in doubt about how to clean your stove, contact the dealer where you bought your stove, or your chimney sweeper.

It is especially important to check the stove and the chimney for blockages after a long period of non-use.

The enamelled surface of the stove may wear down in certain places if the stove is **overheated**. Worn surfaces can, however, be repaired with a special Senotherm® spray paint, available from your local dealer.

The plates in the combustion chamber are **vermiculite plates** and will eventually become worn, as will the smoke deflector plate. Accidental breakage of a plate, for instance by hitting it hard with a piece of wood, will not affect the quality of the combustion. You do not need to replace the plate until the gap is 5 mm wide.

Only use original parts from Varde Ovne A/S

The door is equipped with a spring, which pulls the gate closed. This is a legal requirement in many countries. The spring is fitted to the hinged side of the door but can be removed if you prefer the door not to be spring-loaded.

Do not make any unauthorised changes to the stove.

All external parts of the stove become hot during use, and you should therefore exercise due caution.

IMPORTANT!!
Chimney fires
Should your chimney catch fire, cut off the air supply to the stove's combustion chamber and contact the emergency service. (The majority of fires die out after the oxygen supply is cut off.) You should subsequently contact your chimney sweeper, who will check your stove and chimney for damage

Troubleshooting

Smoke enters the room
• Not enough draught in the chimney.
• Inspect the flue pipe or the chimney for blockage.
• Make sure the **height of the chimney** is correct.

The glass or the chimney soots up
• The wood is too moist.
• Not enough secondary air is supplied to the combustion process.
• You may have shut off the supply of ignition air too soon when lighting the stove.
• There should be clear flames in the combustion chamber at all times.

No heat is emitted from the stove
• The wood is too moist (all energy is spent on drying it) or of a poor quality.
• Inspect the position of the smoke deflector plate and make sure there is free passage for the smoke.
• The amount of combustion (secondary) air is insufficient.

Combustion is too intense
• Rope seals in the door or the ash pan are no longer tight and need replacement.
• The chimney draught is too strong; install a damper in the chimney.
• Check that the ignition air is shut off.

The shaking grate is stuck
• Inspect the grate for jammed wood, nails or the like.
• Make sure the lever is placed correctly.

Recycling

Packaging
For environmental reasons, the packaging should be disposed of together with household waste. The packaging is 100% recyclable.

Ceramic glass
Ceramic glass should be deposited at the local recycling centre (together with pottery and porcelain).

Vermiculite
Vermiculite plates from the stove should be deposited at the local recycling centre.

Spare parts

The following spare parts are available if the need arises:

Vermiculite set, part no. 2223506

Coloured glass, part no. 1771503

Clear glass, part no. 1772503

Rope seal, door, part no. 10014+10008

Door handle, part no. 17706124

Door (black), part no. 1770526

Door (grey), part no. 1770526G

Shake grate, part no. 65

Ash pan (black), part no. 1770555

Ash pan (grey), part no. 1770555G

Glass spring with screws, part no. 10024

Wood catch, part no. 85

Locking system, part no. 1770565

Spring for door, part no. 17706318

AirBox kit, part no. 1770100

Fresh air supply
A continuous supply of fresh air is required in the room in which the stove is situated. This can be achieved by installing one or two vents in the walls, ensuring that they cannot be blocked.

Combustion air supply (extra)
When a stove is installed in a room, the requirements to air supply increase. The air can be supplied through a vent in the outer wall or through a duct from the outside that is attached to the connector underneath the stove. The quantity of air needed for combustion is approx. 14 m^3/h.

The connector has an outer diameter of 63 mm. The pipe diameter has to be increased to 100 mm for ducts longer than one metre and a larger wall vent chosen to match.

Installation options

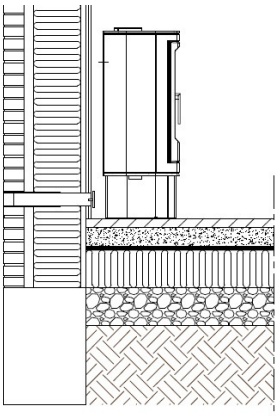

Indirectly through the exterior wall

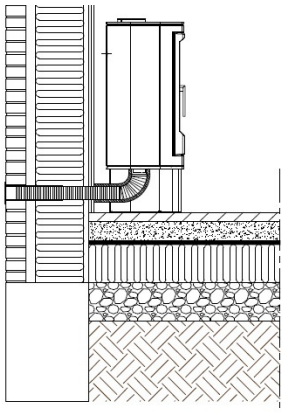

Through the exterior wall

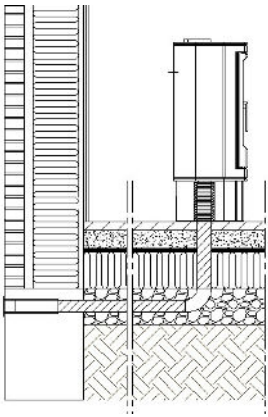

Through the floor and foundation

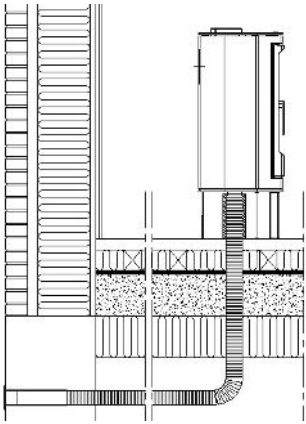

Through the floor and crawl space

Mounting the Airbox Kit (Extra)

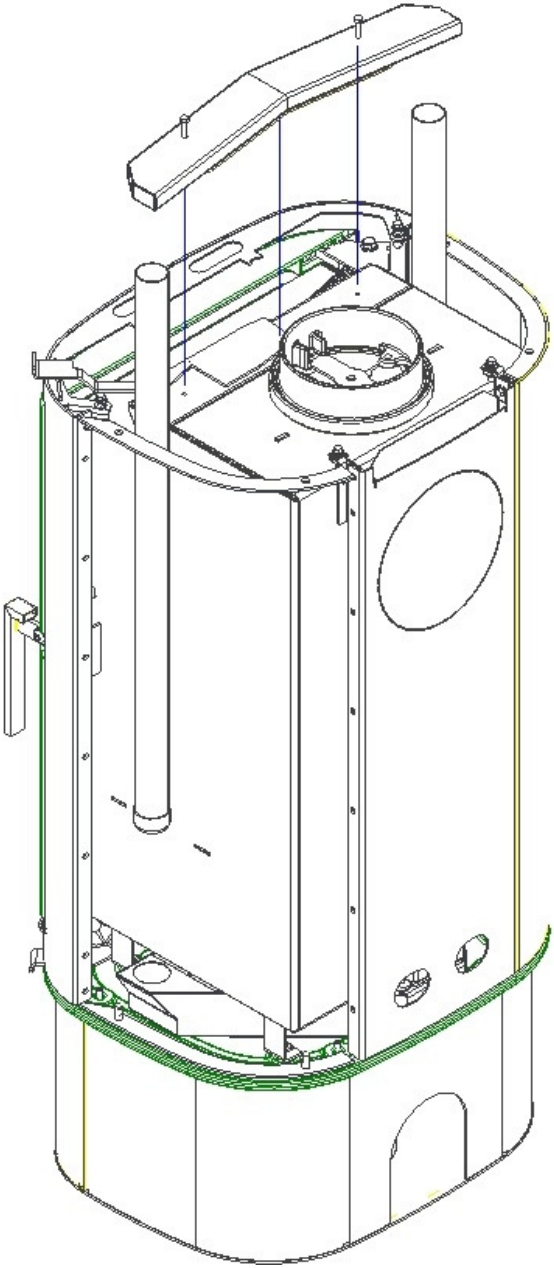

RWE

Feuerstättenprüfstelle • Dürener Strasse 92 • 50226 Frechen

Anerkannte Prüfstelle nach dem Bauproduktengesetz, notified body number: 1427
Anerkannte Prüfstelle nach den Landesbauordnungen, Kennziffer: NRW 16
Anerkannte Prüfstelle im bauaufsichtlichen Zulassungsverfahren
Anerkannte DIN CERTCO Prüfstelle

Prüfbericht über die Typprüfung einer Feuerstätte nach DIN EN 13240:2005-10 und DIN EN 13240 Berichtigung 1:2008-06

Aktenzeichen	**FSPS-Wa 2168-EN**
Hersteller	Varde Ovne A/S, Kongevej 246, Tiset, DK-6510 Gram
Feuerstätte	Raumheizer-Zeitbrandfeuerstätte DIN EN 13240
Typ	Varde Fuego 2 und Variante Varde Fuego 1
Nennwärmeleistung	5 kW
Auftraggeber	Hersteller
Anlieferungsdatum	02.07.2012
Art der Entnahme	Anlieferung durch Spedition

Kurzbericht der Prüfstelle:

Der o.g. Raumheizer hat mit den Prüfbrennstoffen Buchenscheitholz und Profilholz die Anforderungen der DIN EN 13240 erfüllt.

Die Feuerstätte Varde Fuego 1 ist feuerungs- und sicherheitstechnisch baugleich mit der o.g. Feuerstätte. Von Seiten der Prüfstelle bestehen keine Bedenken, die Prüfergebnisse die Variante Varde Fuego 1 zu übertragen.

Dieser Prüfbericht wird unbeschadet der Rechte Dritter insbesondere privater Schutzrechte gegenüber dem Auftraggeber oder Hersteller erstellt.

Der Prüfbericht mit den Seiten 1 bis 10 und den anliegenden Prüfunterlagen a bis g2 enthält die Ergebnisse der Prüfung nach dieser Norm.

Frechen, den 20.07.2012

Dipl. Ing. Joachim Wawrzinek

Unterschrift des Prüfstellenleiters

RWE

RWE Power AG
Feuerstättenprüfstelle
Dürener Straße 92
50226 Frechen
T 0221/480-20745
F 0221/480-20444

VORWEG GEHEN

TEST Reg.nr. 300

TEKNOLOGISK INSTITUT

Teknologiparken
Kongsvang Allé 29
DK-8000 Aarhus C
Phone +45 72 20 10 00
Fax +45 72 20 10 19
info@teknologisk.dk

TEKNOLOGISK INSTITUT
Akkrediteret prøvningsorgan, DANAK-akkreditering nr. 300

PRØVNINGSATTEST

Uddrag af rapport nr. 300-ELAB-1713-NS

Emne: Brændeovn, Type **Varde Fuego 2, Varde Fuego 1, Varde Fuego 1 med 3 delt stålsider og Varde Fuego 1 med fedtsten**

Rekvirent: Varde Ovne A/S, Kongevej 246, Tiset, 6510 Gram (DK)

Procedure:

	Prøvning efter DS/EN13240/A2:2004
x	Prøvning efter NS3058-1, NS 3058-2 og NS3059 (partikelmåling)
	Støvmåling efter DIN plus Zertifizierungsprogramm

PRØVNINGSRESULTATER

Partikelmåling iht. NS 3058 og/eller støvmåling iht. metode DIN plus:

Partikelemission efter NS 3058: 2,26 g/kg (tørstof) middelværdi (maks. 10)

Partikelemission efter NS 3058: 2,53 g/kg (tørstof) maksimalt (maks. 20)

Støvemission efter metode DIN plus: - mg/Nm³ ved 13% O_2 (maks. 75)

Bemærk venligst, at de oplyste værdier er et uddrag af prøvningsrapporten. For yderligere oplysninger henvises til prøvningsrapporten, se nummer ovenfor.
Teknologisk Institut er notificeret prøvningsorgan med ID-nr. 1235.

Århus, den 28. aug. 2012 Morten Gottlieb Jespersen Civilingeniør	Skorstensfejerpåtegning

På baggrund af ovennævnte partikelemission attesteres det hermed, at fyringsanlægget opfylder emissionskravene i bilag 1 til Bekendtgørelse nr. 1432 af 11/12/2007 vedr. regulering af luftforurening fra brændeovne og brændekedler samt visse andre faste anlæg til energiproduktion.

Y:\Organization\C014_Vedvarende Energi og Transport\ELAB\Drift\Attester\Brovn\Alle udstedte Attester\Varde-1713-Type-Fuego 2.doc

Warranty
All **Varde Ovne stoves** go through strict quality control, and we take pride in always delivering products of a consistent quality. This being so, manufacturing faults may still occur, and on these we offer a **5-year warranty.**

The warranty does not include:
Wearing parts, such as the vermiculite plates in the combustion chamber, the smoke deflector plate, glass, rope seals, cast iron bottom and shaking grate
Damage occurring as a consequence of incorrect use, such as overheating, incorrect installation, missing or incorrect maintenance, etc. (see instructions above)
Damage caused by external influence of a physical character
Cost of transportation in connection with warranty repairs
Assembling/reassembling in connection with warranty repairs
Compensation for consequential damage, including damage to other objects.

Warranty conditions
These instructions for use are also your proof of warranty. The warranty does not take effect until a dealer's stamp and information about model, serial number and date of purchase (invoice if possible) have been provided below. In the event of a claim, please take this proof of warranty to your local dealer.

Model: _____

Serial.no.: _____

Date of purchase: _____

Dealer's stamp and signature

VARDE OVNE

Kongevej 246, 6510 Gram, Danmark, Tel. +45 7482 0003. vardeovne.dk